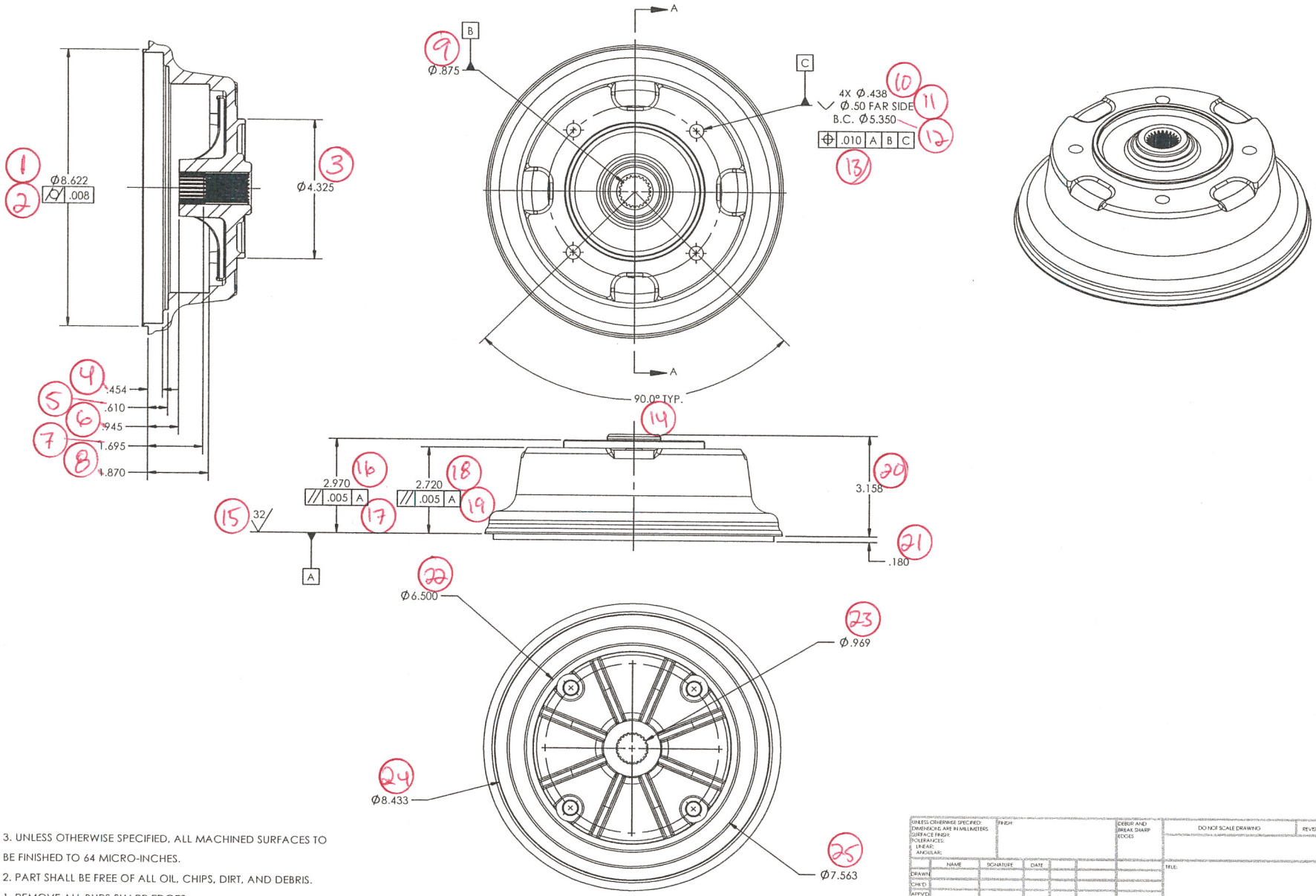

3. UNLESS OTHERWISE SPECIFIED, ALL MACHINED SURFACES TO BE FINISHED TO 64 MICRO-INCHES.

2. PART SHALL BE FREE OF ALL OIL, CHIPS, DIRT, AND DEBRIS.

1. REMOVE ALL BURS SHARP EDGES.

UNLESS OTHERWISE SPECIFIED: DIMENSIONS ARE IN MILLIMETERS SURFACE FINISH: TOLERANCES: LINEAR: ANGULAR:	FINISH:		DEBUR AND BREAK SHARP EDGES	DO NOT SCALE DRAWING	REVISION
	NAME	SIGNATURE	DATE	TITLE:	
DRAWN					
CHK'D					
APPV'D					
MFG					
Q.A			MATERIAL:	DWG NO. Casting	A2
			WEIGHT:	SCALE:1:2	SHEET 1 OF 1